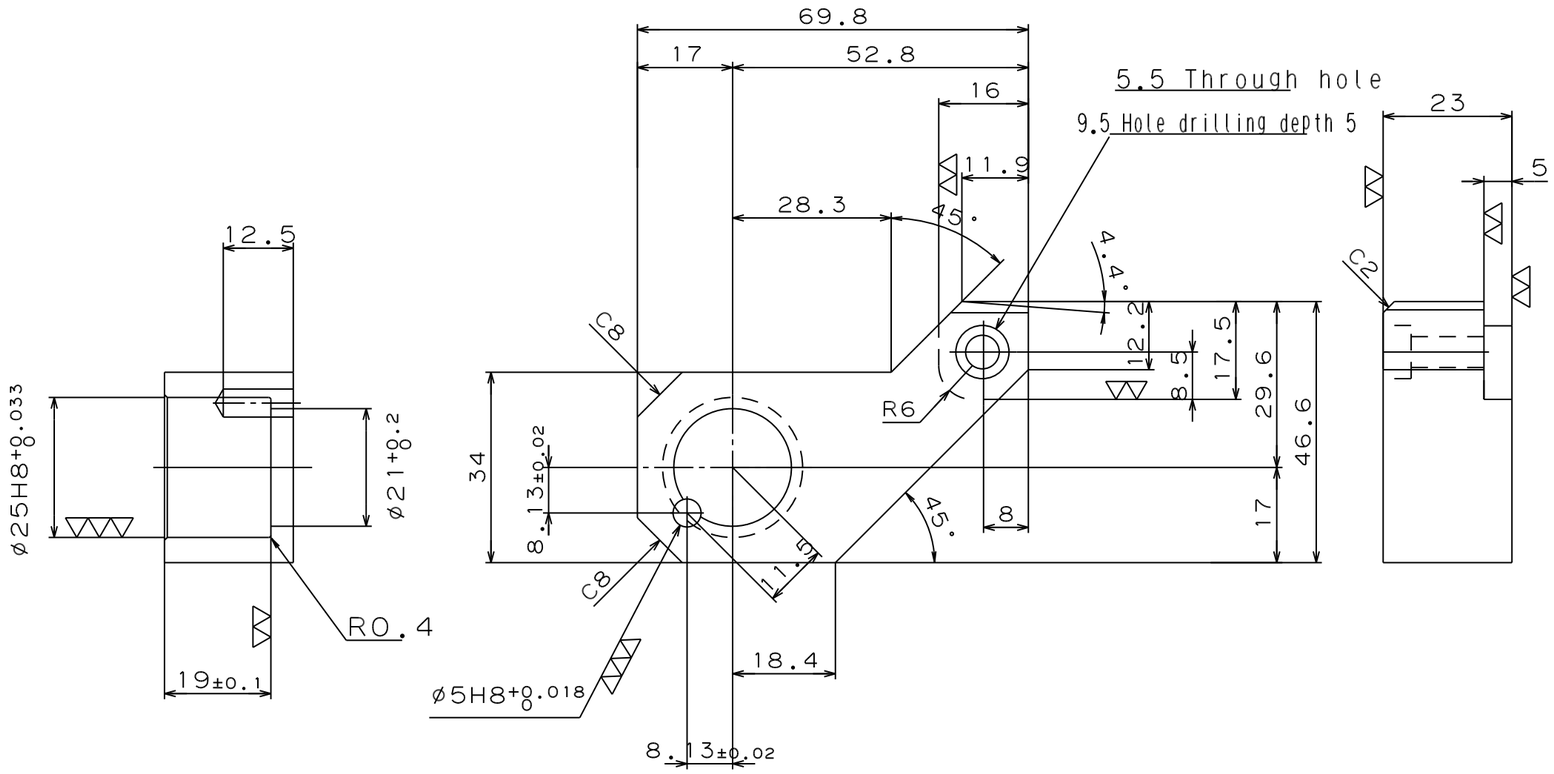

Report
Heat treatment
Surface treatment
Black dyed
Third each painting method

Normal dimensional tolerance(unit:mm)	
More than 1 less than 4	±0.1
More than 4 less than 16	±0.2
More than 16 less than 63	±0.3
More than 63 less than 250	±0.6
More than 250 less than 1000	±0.8

Out of description finish

Each corner without instruction is C0.5 chamfer

Checked	Drawn
	MU

Part name	Type	Q'ty	Note	Code	Date	Revisions	Reviser
Parallel pin	ø5X10	1					
Bolt with hole	M5X20	1					

Scale	1/1	Q'ty	1	Part name	Clamper 2
Material	S45C			Unit name	CASE equipment deburring machine
Date	'19.03.28			Machine name	
Star tech Co.,Ltd.				Drawing No.	TSC539-J1023