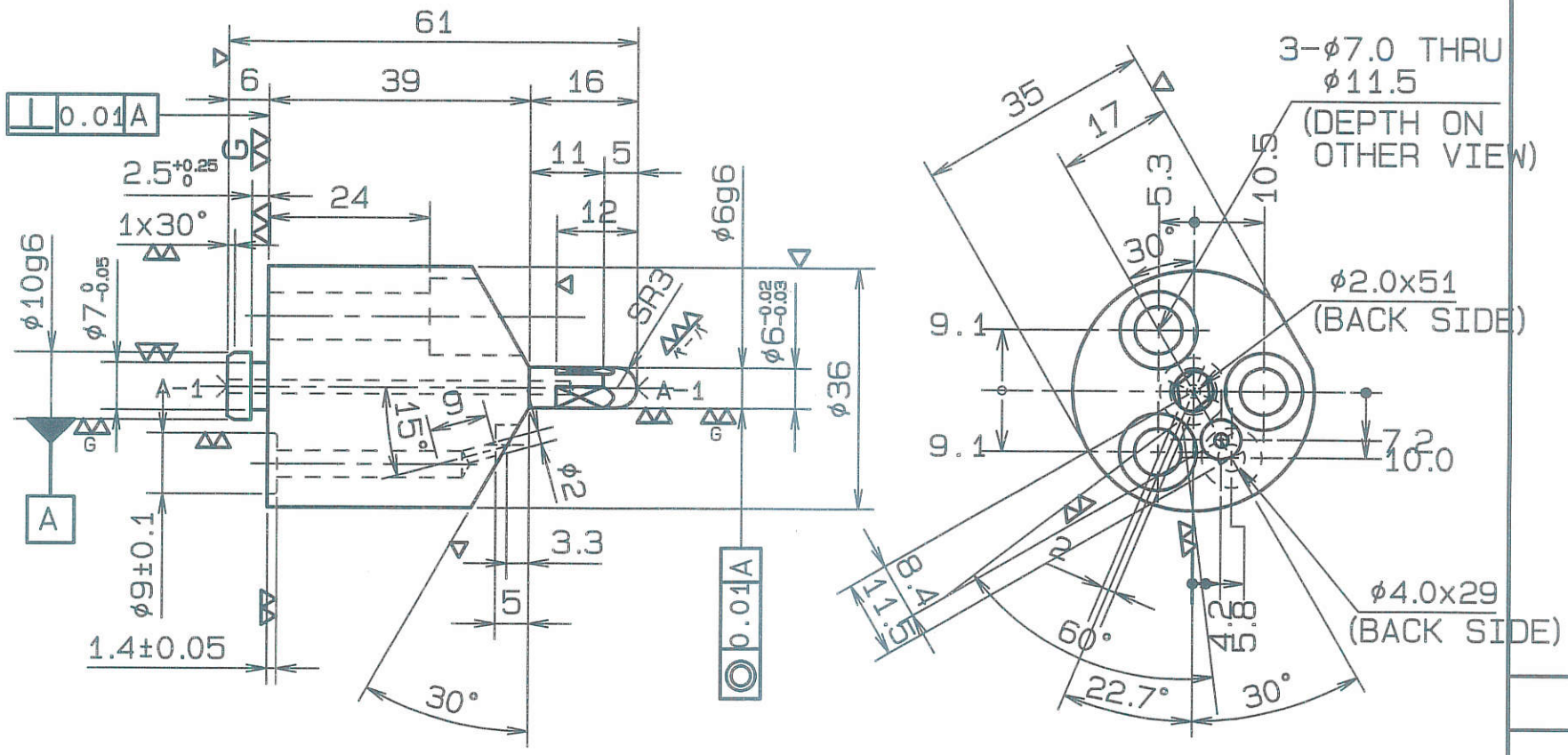

指示なき各角はC1程度の面取のこと
CHAMFER ALL EDGES 1×45° UNLESS SPECIFIED

						MATERIAL	SCM415H	MACHINE NAME	
						MATL SIZE		GROUP	OP30 BABY
						MATL CODE			
						WEIGHT	0.24Kg	PART NAME	PIN/DIA
OLD PART NO.	T1335-407	PART NAME	QTY			HEAT TREAT	CARBURIZED QUENCHING Thickness 0.8~1.2		
ALT ORDER						HRC	58~62		
ALT DATE	2015.08.07					APPROVED BY	CHECKED BY	DESIGNED BY	PART NO. T1335-407-12
ALT BY	Y.HANAZAMA								
DRWG BY	ZAMBY	DRWG DATE	13.06.28						OKS CO.,LTD.

SCALE 1/1
POS 1
MF