CONFIDENTIAL

6.3

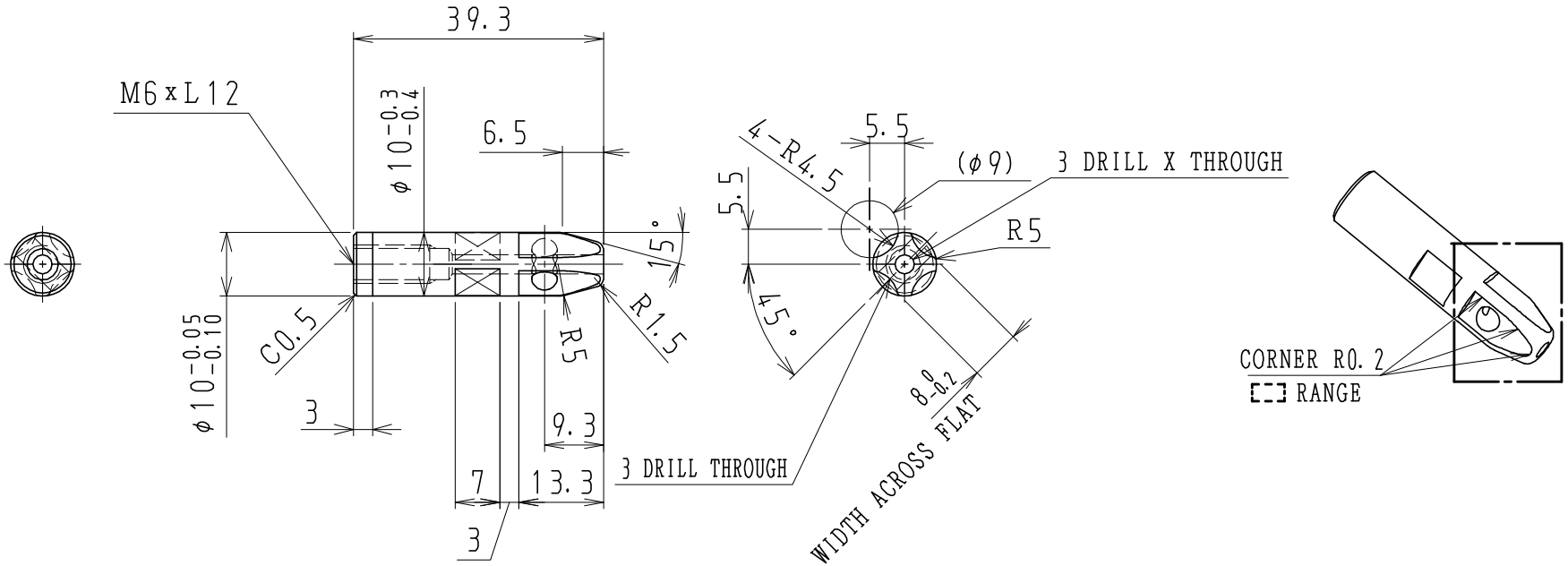

BEFORE MACHINING

PRECIPITATION HARDENING HEAT TREATMENT
H1025
HRC 35~40

BREAK ALL SHARP EDGES C0.3

FEMALE SCREW END IS CHAMFERED REF. TO THE PILOT HOLE.
THE SIZE IS 1.2 TIMES OF THE THREAD PITCH.

No.	NAME	MTL	Q'ty	SPEC.	
	HEX SOCKET HEAD BOLT WITH THROUGH HOLE		3	CBAS6-15	MISUMI
45	GUIDE PIN	SUS630	3	φ12-40	

UNIT	FIXTURE UNIT (011)	DATE	'19 01.16	Fixture parts drawing
		SCALE	1/1	
		D#	M18#B0037-△	

I・標準・0014