BREAK ALL EDGES C 0.5

UNSPECIFIED TOLERANCES (MACHINING)	
0.5 TO 6	± 0.1
6 TO 30	± 0.2
30 TO 120	± 0.3
120 TO 400	± 0.5
400 TO 1000	± 0.8
1000 TO 2000	± 1.2
2000 TO 4000	± 2.0

DATE	10/12/26		
SYM	REVISION RECORD	DATE	NAME
1			
2			
3			

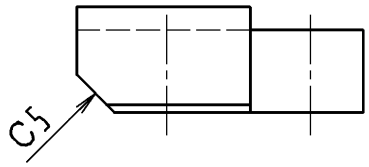

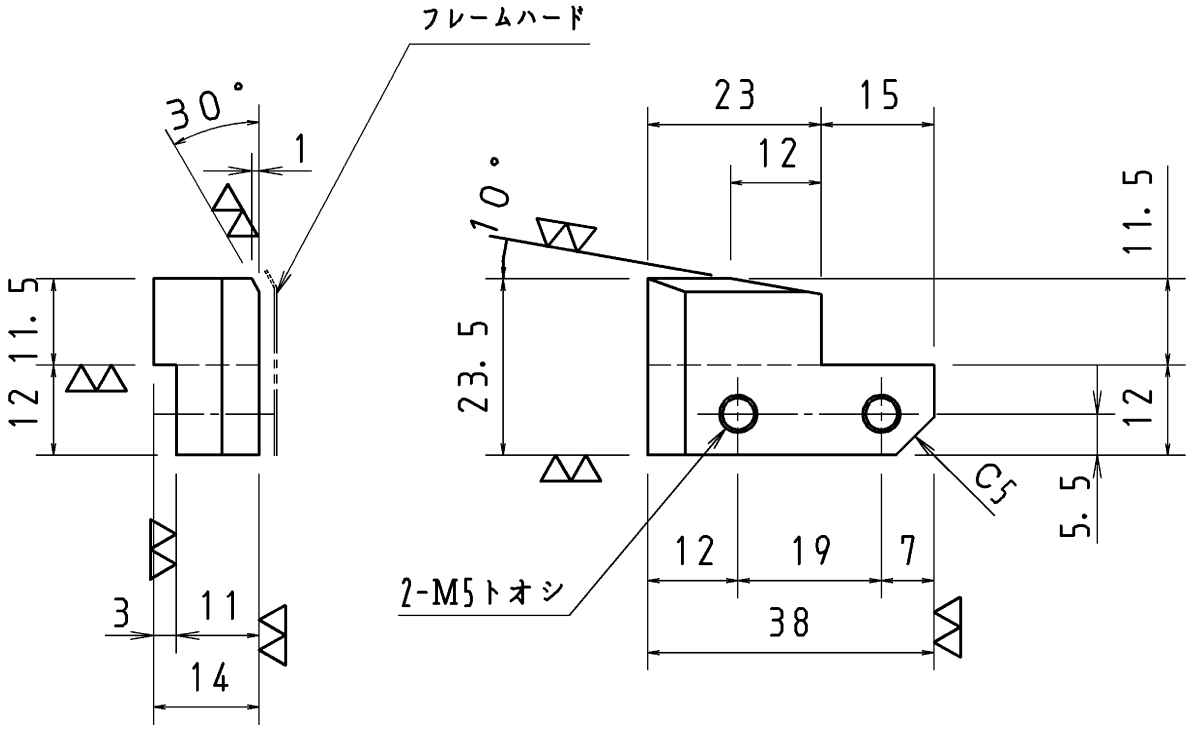

OP65-1A, B, C, D 1X4=4PCS
OP65-2A, B, C, D 1X4=4PCS
OP65-3A, B, C, D 1X4=4PCS

PAINTING SPECIFICATION		
PAINT	Y	N
PUTTY	Y	N
WORKED SURFACE	Y	N
BASE COAT	Y	N
STD. COLOR	OP. COLOR	

CUSTOMER'S M/C NO.		S. O RW12534		CODE 104	
MATERIAL S50C	HEAT TREAT. フレームハード	SCALE 1/1	APPR'D	CHKD	DRN
PATTERN NO. —	HARDNESS HRC 50~55	THIRD ANGLE PROJECTION		MATSUSHIMA	T. M
NOTE	Q'TY	TYPE	DRN NAME STOPPER		
Ensu Limited			DRN NO. CX725 171-125		